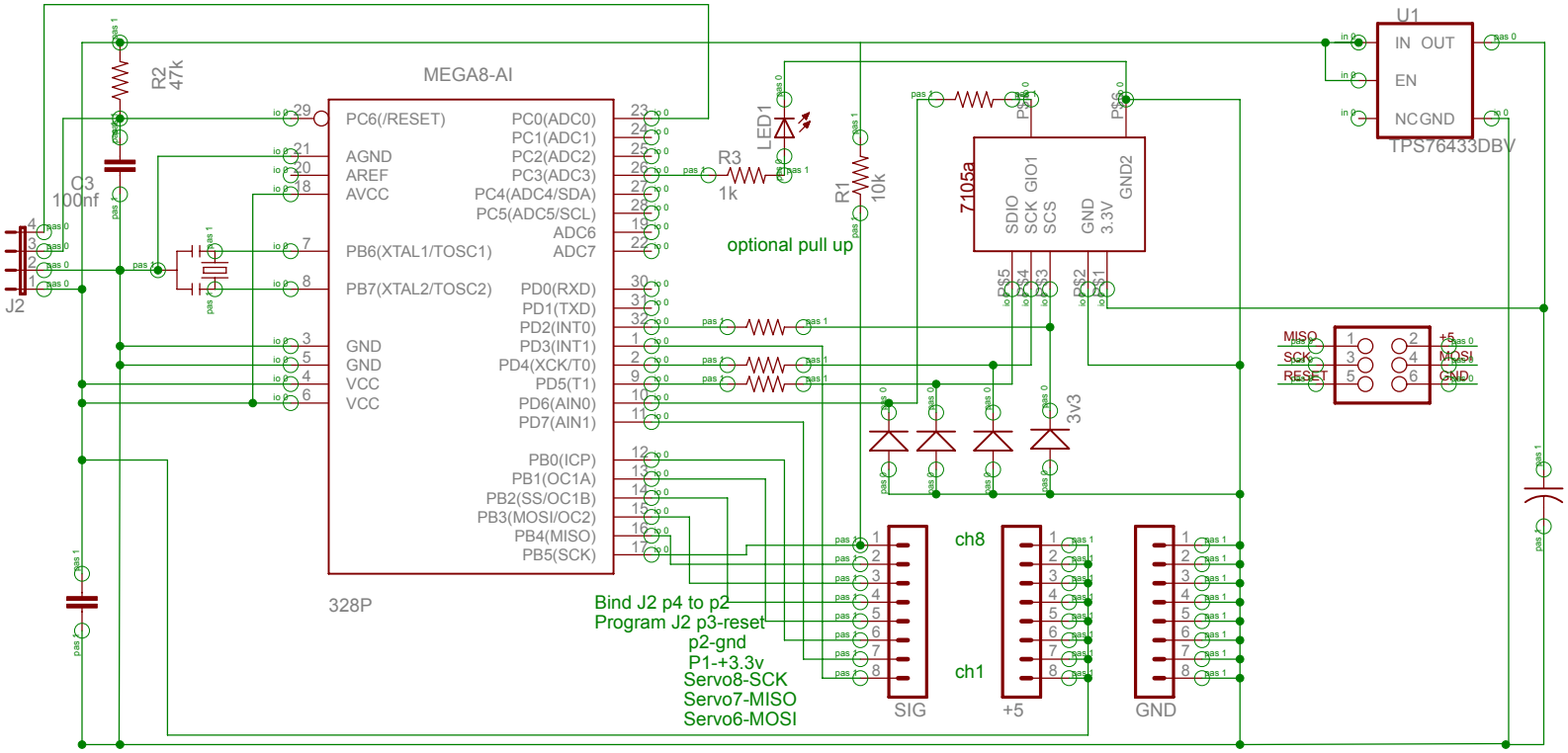

03.09.2014 11:54:11 C:\Documents and Settings\kozin\Рабочий стол\hobbysite\boards\Eagle\MyBoards\Midelic RX Rev F\MidelicRXREV F.sch (Sheet: 1/1)